Complex System Design Cycle, Analysis and Test, Fabrication Package

Dr. Kathryn Wingate

ME 4182

Overview

- Complex System Design Cycle
- Analysis and Test
- Fabrication Package

Learning Objectives

- Understand why analysis and test is critical
- What to analyze/test
- Develop concrete analysis and test plans
- Present analysis and test results
- What to include in fabrication packages

Long Range Strike Bomber

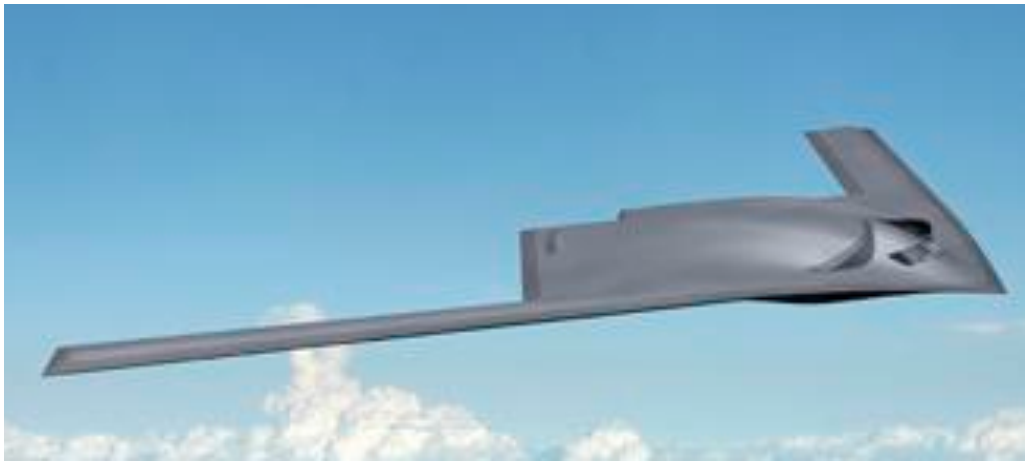

Boeing/Lockheed Martin
Concept Image

Northrop Grumman
Concept Image

The LRS-B will provide operational flexibility across a wide range of military operations.

Defense System Acquisition Framework

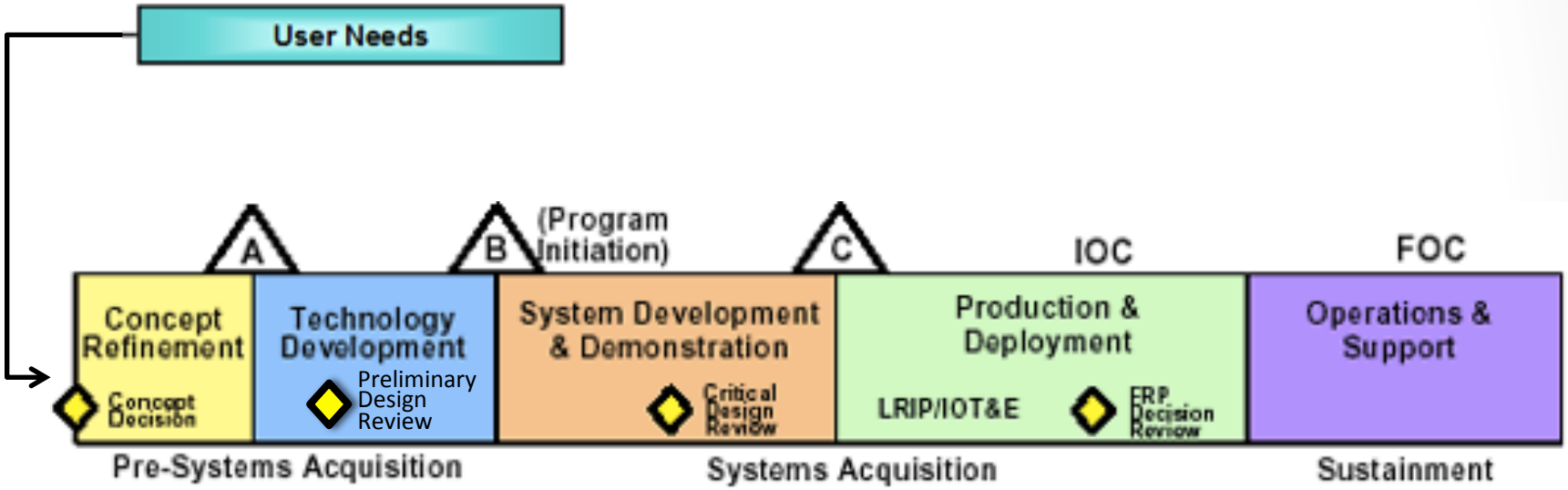

User Needs

U.S. AIR FORCE

AEHF Satellite Vehicle (SV) 5/6

Solicitation Number: FA8808-11-R-0007
Agency: Department of the Air Force
Office: Air Force Space Command
Location: SMC - Space and Missile Systems Center

Develop and acquire Advanced Extremely High Frequency (AEHF) Military Satellite Communications (MILSATCOM) satellites, mission control segment and cryptography for survivable, anti-jam, worldwide, secure communications for the strategic and tactical warfighters.

AEHF satellites will replenish the existing EHF system (Milstar) providing much higher capacity and data rate (5x increase over Milstar II) capabilities.

Satellites must be fully backward compatible with existing ground infrastructure, to include fielded Low Data Rate (LDR) and Medium Data Rate (MDR) terminals; in-development extended data rate (XDR) terminals

Launch of the SV5 satellite is required within seven years of the initial authorization for full funding expected in 2012. SV6 launch will follow one year after launch of SV5. The period of performance for this procurement is for 9 years and will begin in 2012.

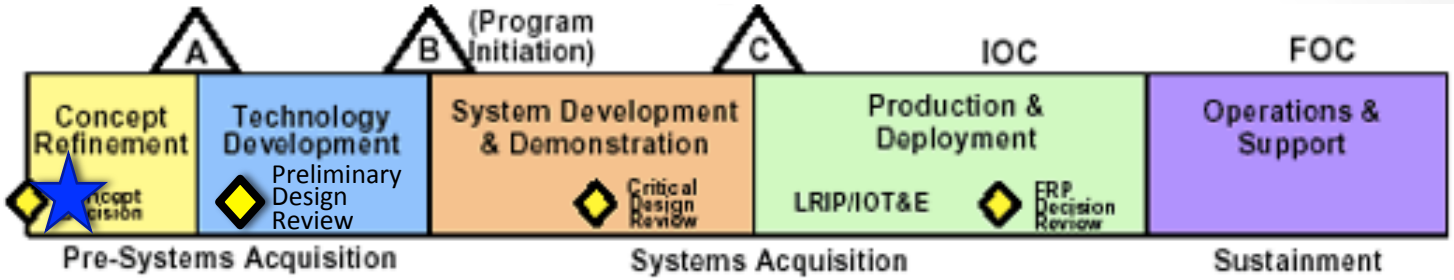

Complex Design: Subsystems

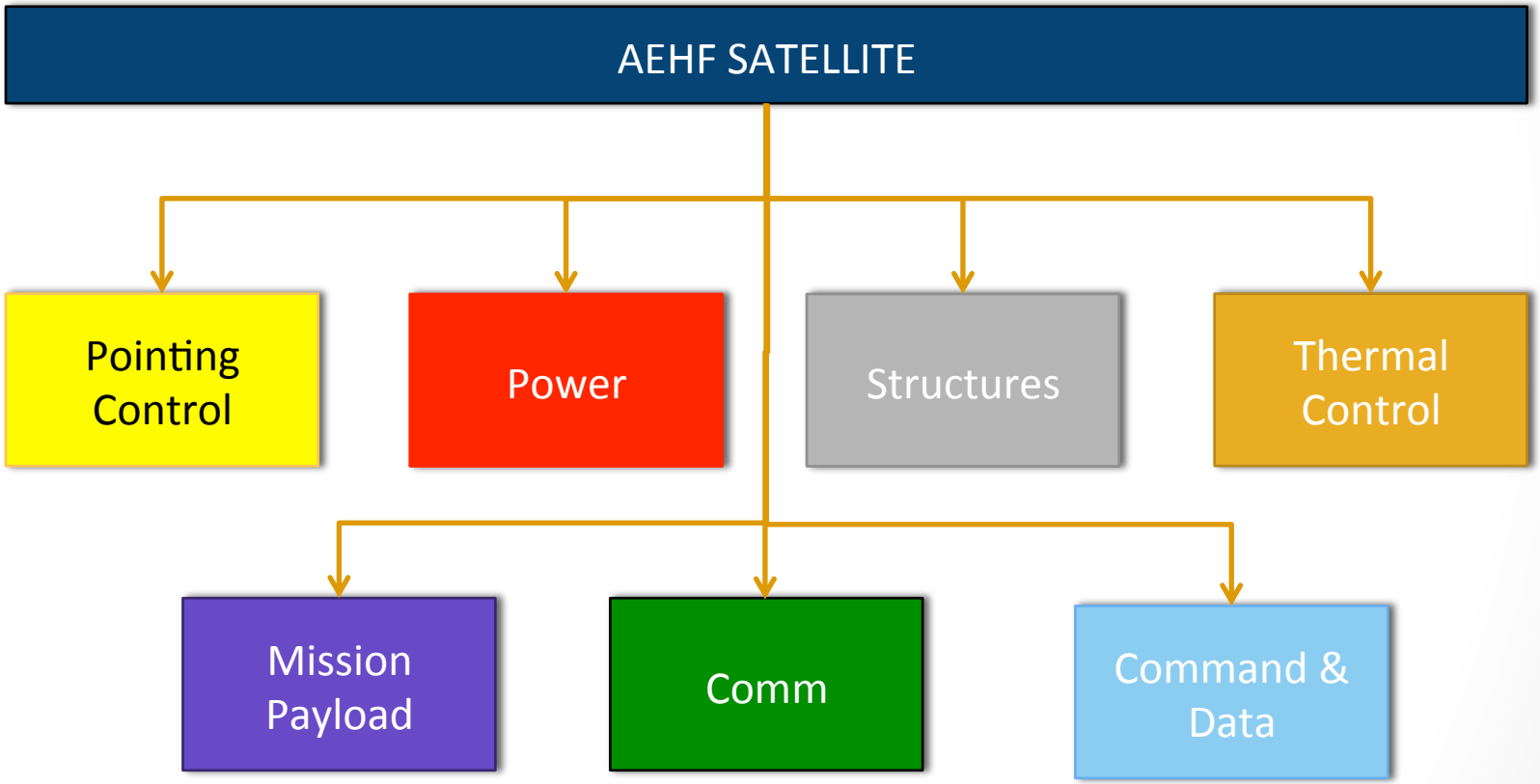

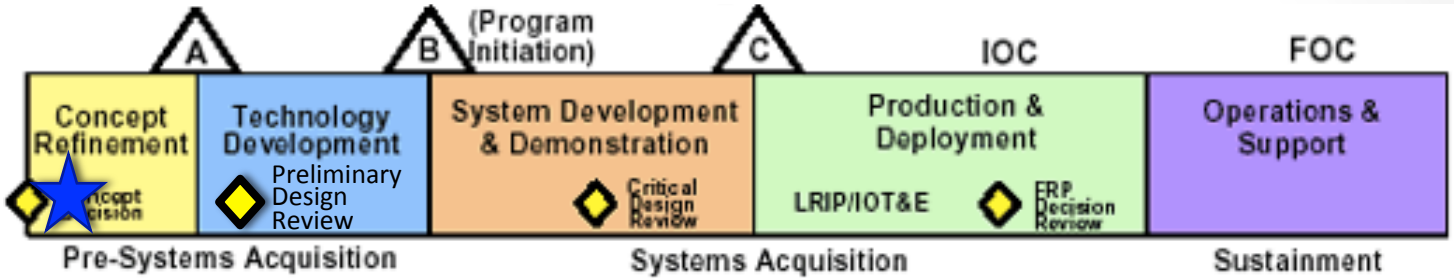

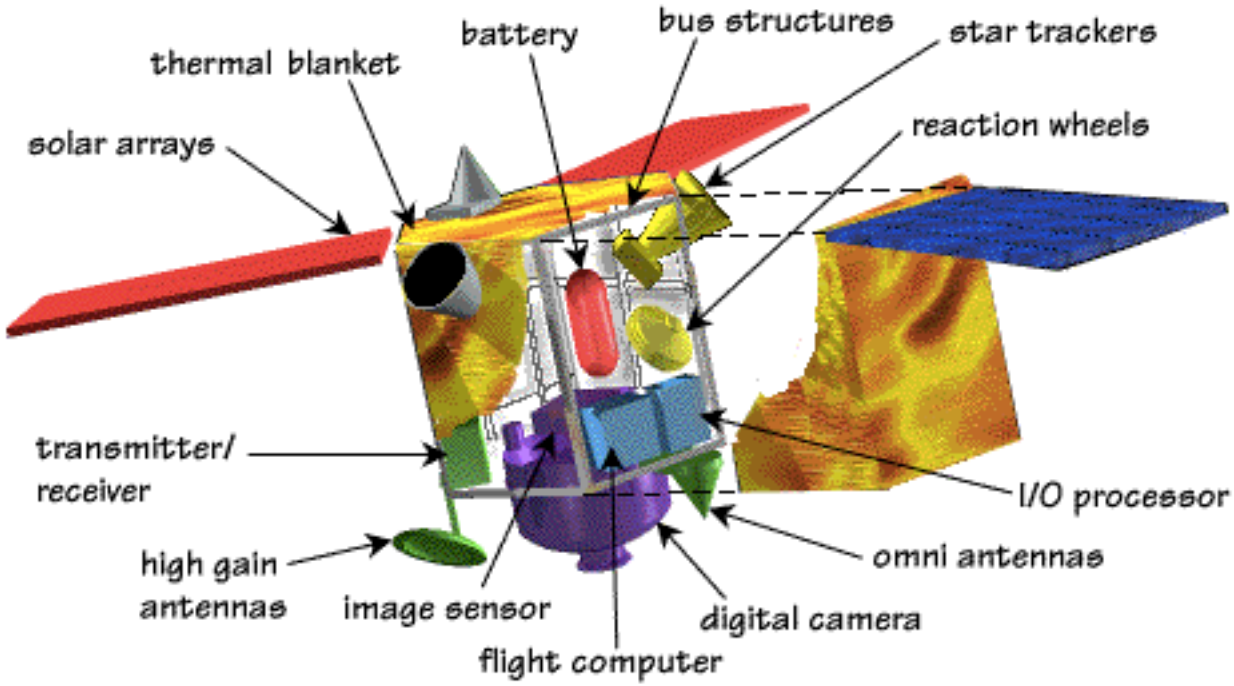

Command & Data
Pointing Control
Communications
Power Supply
Mission Payload
Thermal Control

LOCKHEED MARTIN

Concept Refinement

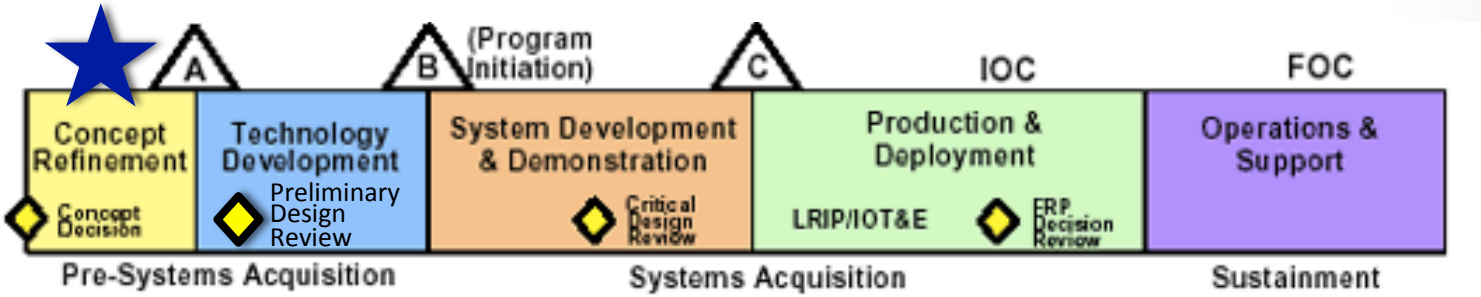

Engineering Requirements
Specification Sheets

Market Research
Problem Understanding
Ideation

Trade Studies
System Optimization

Analysis: Demonstrate
Design Functionality

Proposal: Preliminary
Design

Congressional
Lobbying

Proposal Awarded

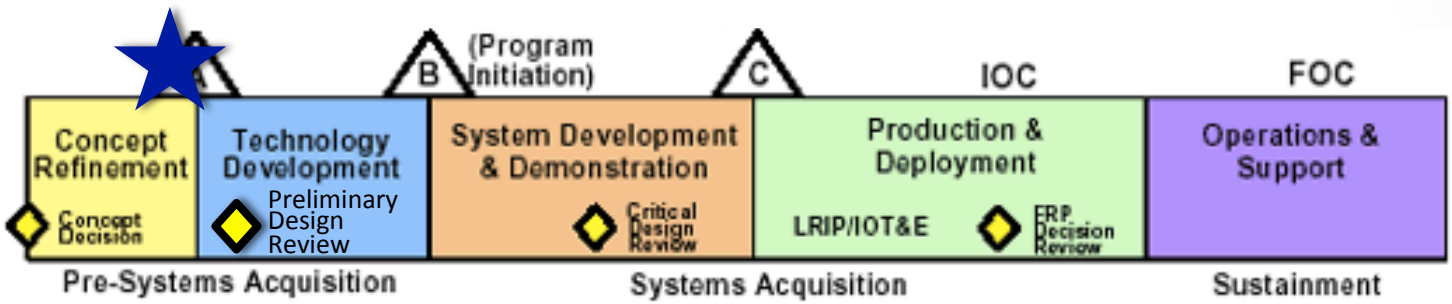

Requirement Creep.

Technology Development: Preliminary Design Review

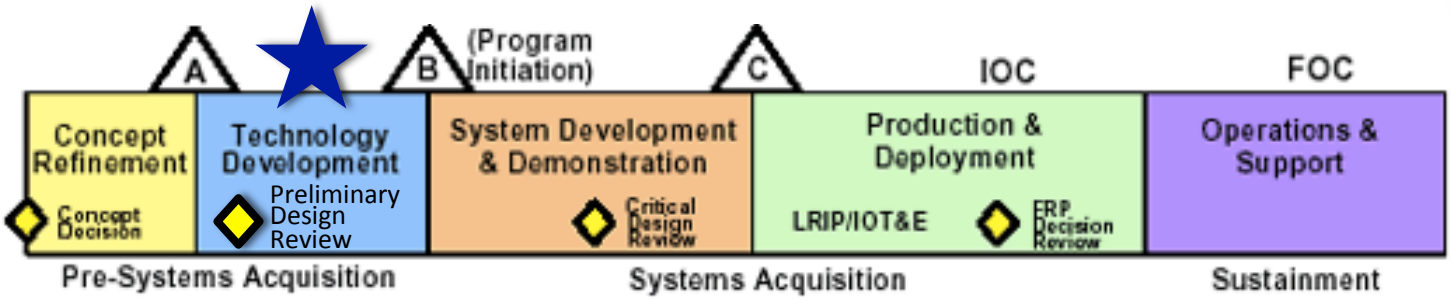

Detailed Preliminary Design

- Engineering Requirements/ Specification Sheet
- Preliminary Analysis
- Testing: qualification of new materials and designs

System Development & Demonstration Critical Design Review

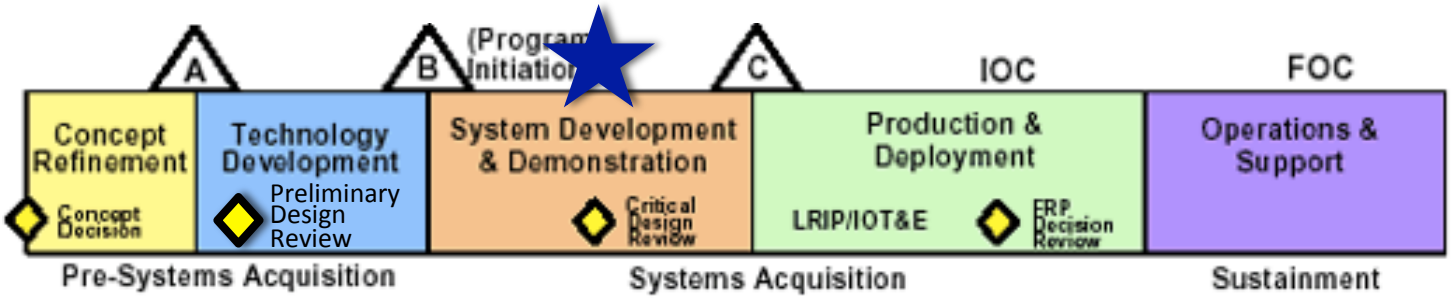

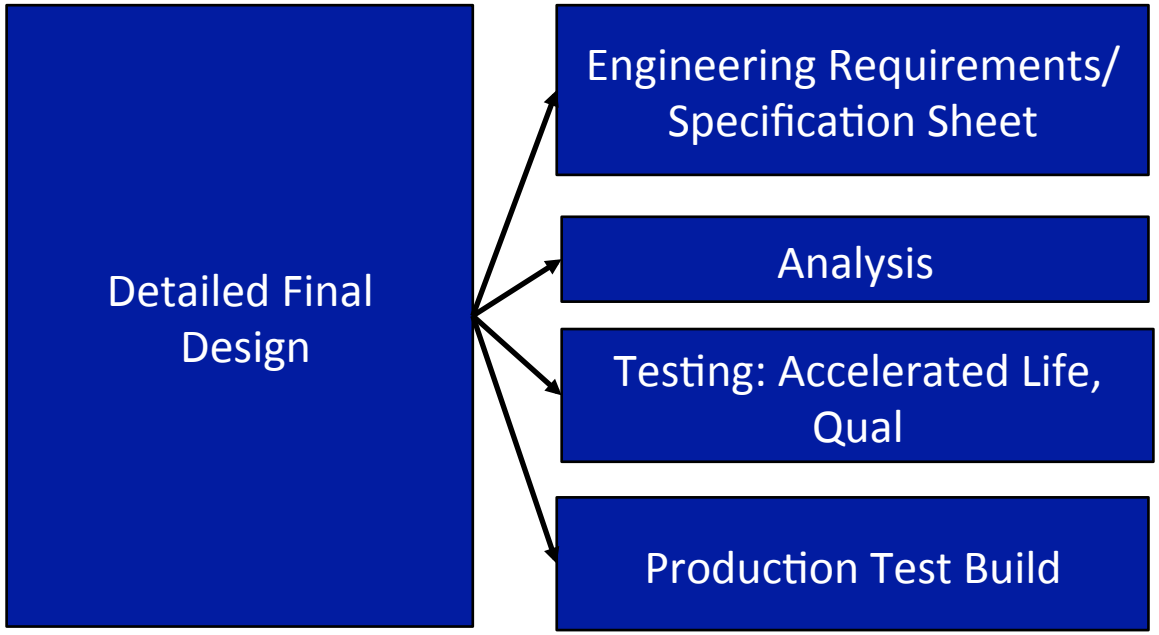

Why do we go through this prior to production?

Design <-> Cost

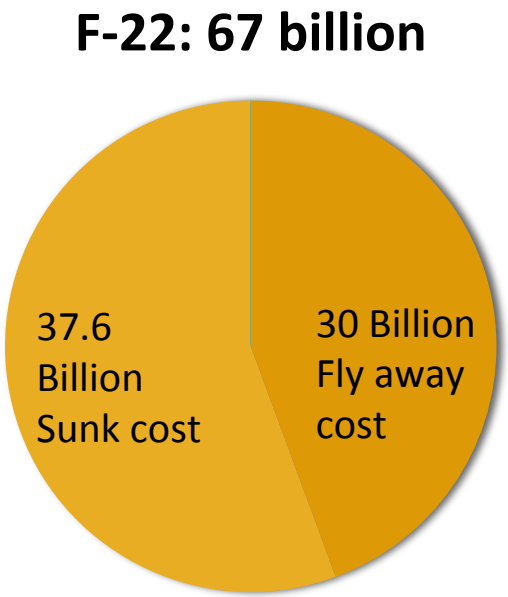

- Failures in production -> major cost.

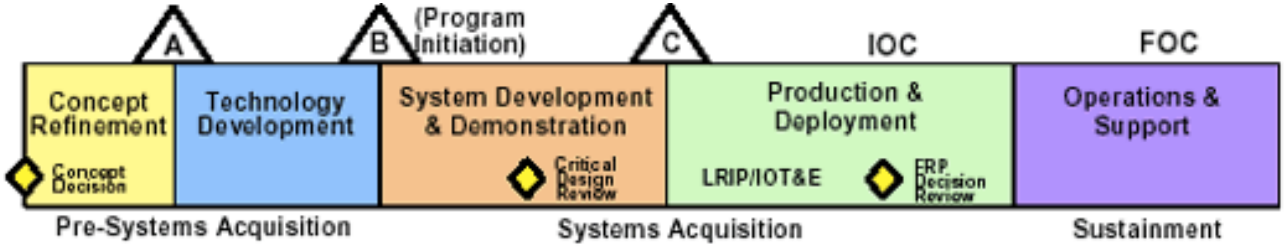

System Development and Demonstration: Manufacturing Readiness Review

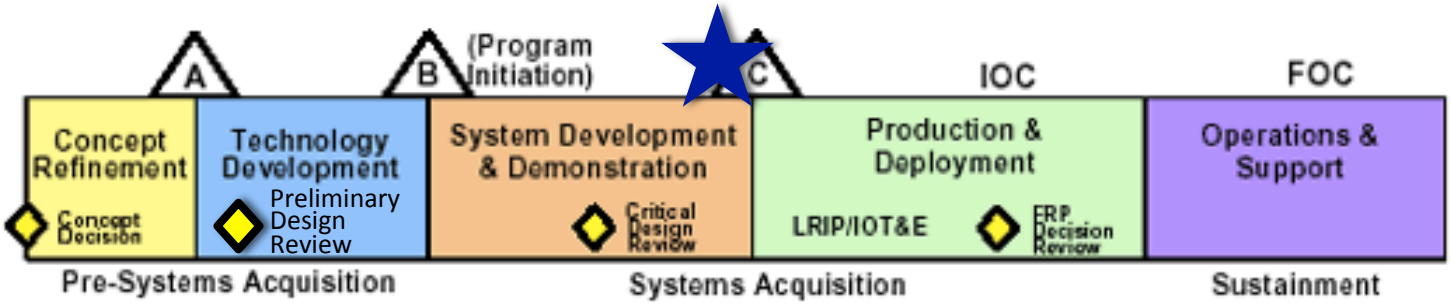

Pre Production Run Data

Manufacturing Process Flow and Plans

Schedule

Production and Deployment:

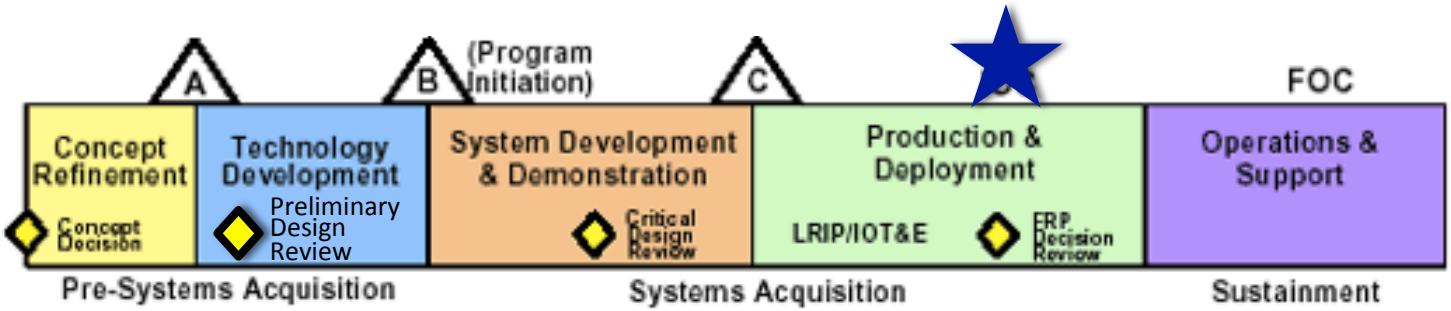

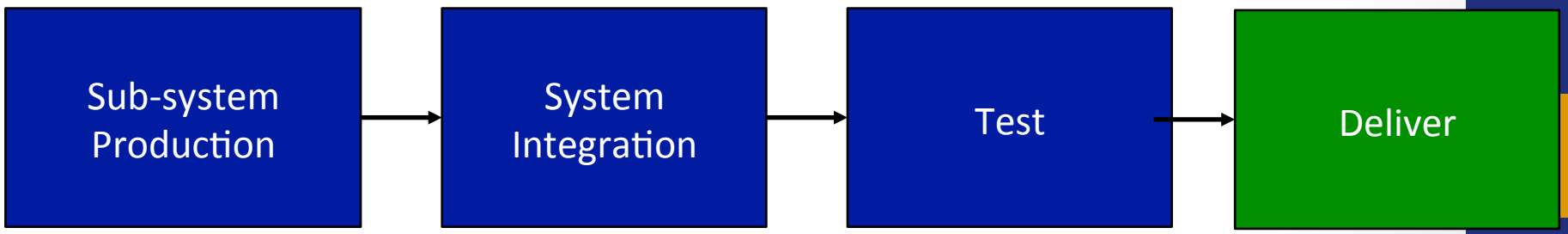

Design Cycle: Capstone

Develop Customer/ Stakeholder Needs → **Develop Engineering Requirements** → **Design to Engineering Requirements** → **Validate Engineering Requirements** → **Production**

- Stakeholder analysis
- Market research
- House of Quality

- House of Quality
- Spec sheet
- Regulations
- Analysis

- Ideation
- Function tree & Morph charts
- Trade studies
- Industrial Design
- Human Factors
- CAD/Modeling
- Mock ups
- Analysis

- Analysis
- Test
- Inspect
- Prototype

Analysis and test starts early and continues through production.

Analysis and Testing

Life as an analyst

- https://www.youtube.com/watch?v=BKorP55Aqvg

Why do we do analysis?

Why do we do analysis?

- Selection: Analysis can improve design!
  - Wall thickness
  - Fastener selection
  - Number of fasteners
  - Weight reduction
  - Material selection
  - Structural geometry
  - Component selection
  - Gear train design

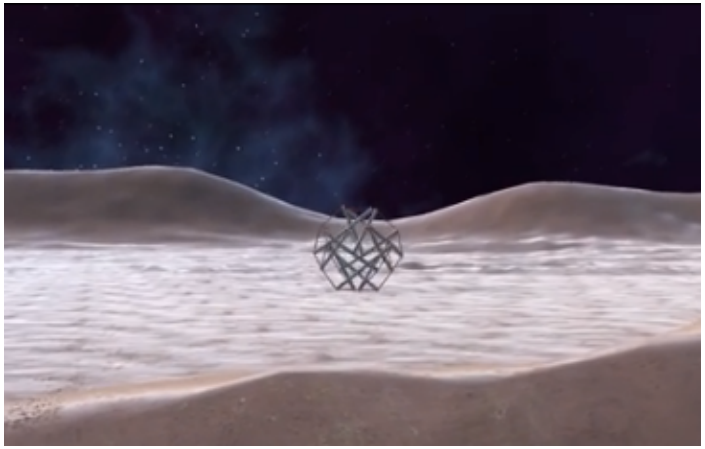

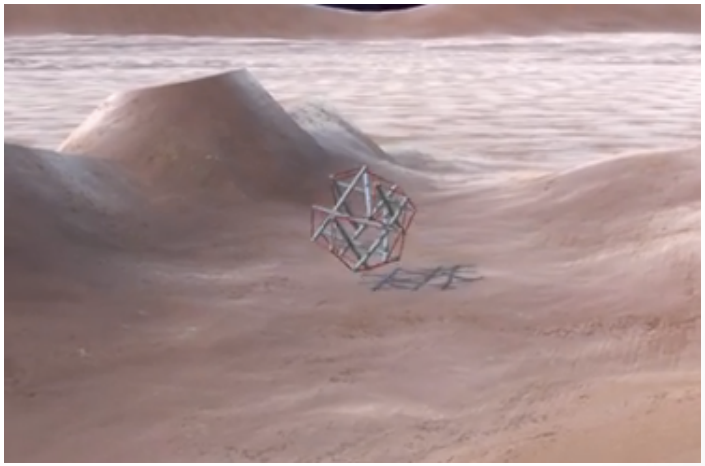

Dr. Julian Rimoli
http://www.magicalrobot.org/BeingHuman/2016/01/related-projects-by-collaborators

Why do we do analysis?

- Validation: Analysis demonstrates design meets engineering requirements!
  - Life
  - Load
  - Weight
  - Geometry
  - Gain/Phase
  - Power
  - Thermal

Types of Analysis

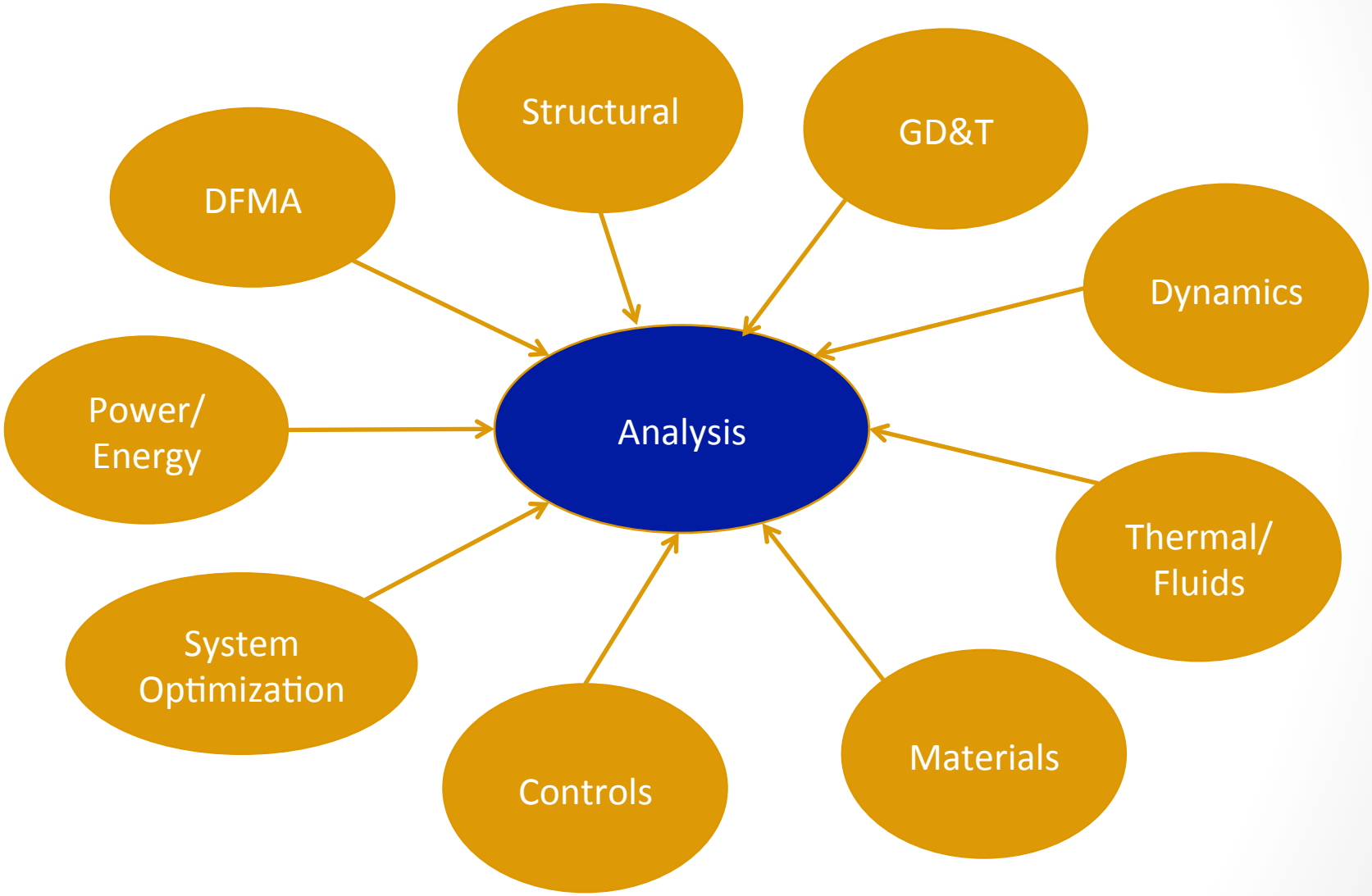

You learned analysis in….

- ME 1770
- MSE 2001
- ME 2016
- ME 2202
- C0E 3001
- ME 3322
- ME 3340
- ME 3017
- ME 3345
- ME 3210
- ME 3180
- ME 4315

… Now, how do you decide what to analyze?

What to Analyze/Test

- Choosing requirements to design to/validate with analysis:
  - System critical requirements
  - Design for function (operational loads)
  - Design for failure (limit loads)
    - Failure Modes and Effects Analysis (FMEA)
  - Life, load, and weight
  - Choose your components/dimensions from analysis!

When to Analyze

- Can be validated by analysis
  - Does your team have the capability to complete this analysis?
    - Outsource analysis with technical consulting firms!
  - Will good results validate the problem with the correct level of confidence?
- Time efficient
- Expensive test setup
- Need both testing and analysis
  - FMEA indicates high risk (high probability and severity)
  - http://www.youtube.com/watch?v=Ai2HmvAXcU0

When to Test

- Analysis is not a good predictor of failure mode
  - Fatigue failures
  - Shock failures
  - Fracture propagation
  - Corrosion, environmental tests
  - https://www.youtube.com/watch?v=_jfXX7qppbc

- Easier to test than to run analysis
  - Time consuming simulation

- Failure dependent on manufacturing process or material
  - Material lot screening
  - Manufacturability screening

- Need both testing and analysis
    - FMEA indicates high risk (high probability and severity)

Developing an Analysis Plan

- What is the requirement?

- What is your factor of safety?
  - How well do you know the design/material (heritage?)
  - How confident are you in the material properties?
  - How confident are you in the analysis predicting the failure mode?
  - Is this requirement system critical?

- Design for function: Simulate the operating environment!
  - What are your knowns?
  - What assumptions are you making?
    - Point load?
    - Thermal environment?
    - k_f = is there anything special about this environment? Corrosion? Plating?
    - Constrained? Boundary conditions?

- Design for failure: worst case scenario

- Determine analysis based off of:
  - Textbooks (Shigley's, Roarks, CRC handbooks)
  - Standards: ASME, MIL STD, ect.
  - Literature (Google scholar), Experts in the field

Developing a Test Plan

- What is the requirement?
- What is the operating condition?
  - Thermal?
  - Mechanical?
  - Geometry?
  - Environmental?
- What tests are already done for these requirements/conditions?
  - MIL HNDBK J, ASTM, MIL STD 883
  - NIST
- What are the pass criteria?
  - Visual inspection at 20x: no visual cracking or fracture
  - CT scan/X-ray: no internal fracture
  - Dye penetrant check for fracture
  - Yield at > 50 ksi
  - Electrical performance
- What is your plan for each possible outcome of the test?

Vascular Graft (Bypass)

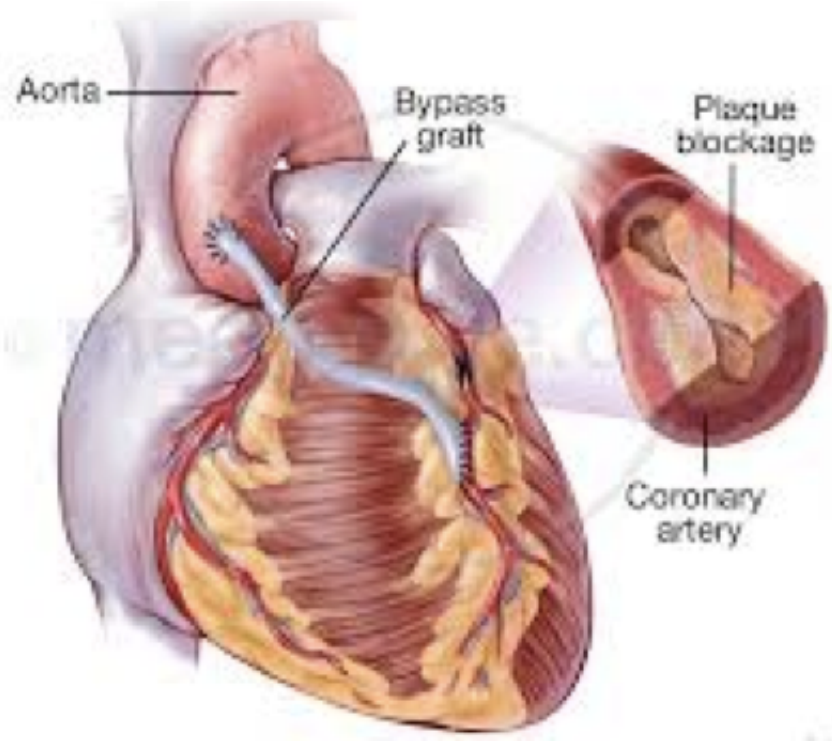

- Liquid tight
- Suture retention: 1.20±0.23 N
- Withstand static pressure: 200 mmHg (systolic)
- Withstand diastolic/systolic cycle for patient life: $4.2X10^9$ repetitions
- Promote laminar blood flow
- Biocompatiable

Testing

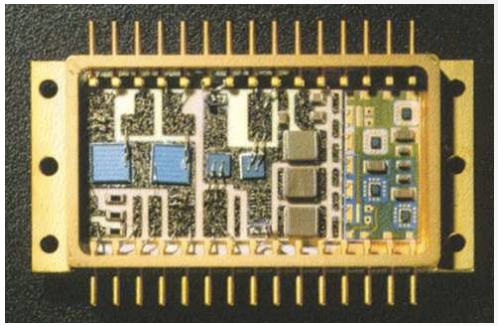

Class S (Space Flight) Microelectronic Circuit

- MIL STD 883:
  - Open electrical test
  - -100x (high power) visual inspection of semiconductor and package
  - Thermal Cycle (-65 C to 165 C)
  - Centrifuge (30,000 g)
  - Particle Impact Noise Detection (mini-vibration test)
  - Gross Leak Testing
  - Fine Leak Testing
  - External Visual Inspection
  - Electronic 'Burn in' test

- Destructive Tests: (Done on small percent of packages for qual)
  - Residual Gas Analysis
  - Drop Test
  - Accelerated life tests

  * Internal visual inspection
  * Cross section
  * X-Ray

Common Analyses (Mechanical)

- GD&T: Tolerance Stack Up (Worst Case Scenario)
- Static Loading: Von Mises: (bending, axial, torsion, shear)
- Fatigue: (Goodman)
- Coefficient of Thermal Expansion:
  - Geometry
  - CTE mismatch
- Fasteners: Preload, Shear
- Components: life/load
- Gear Trains: torque, HP, gear ratios
- Model analysis (Vibration, natural frequency), Shock

- “It doesn’t matter how smart you are if you can’t explain your analysis to the program manager and the customer.”

  - Chief Engineer, Hamilton Sundstrand

Presenting/Reporting Analysis

- **What was the requirement that drove this analysis?**

- **What is the mode of failure your concerned about?**
  What type of analysis did you complete?
  - Shear pull out?
  - Goodman fatigue?

- **What are the key assumptions in the analysis?**
  - Boundary conditions?
  - Material properties?
  - Loading?
  - Nodes and elements?

- **How does your analysis show this requirement has been validated?**
  - Factor of safety?
  - Gain and phase margin?

Just… No.

FEA: Contact Analysis of Gasket

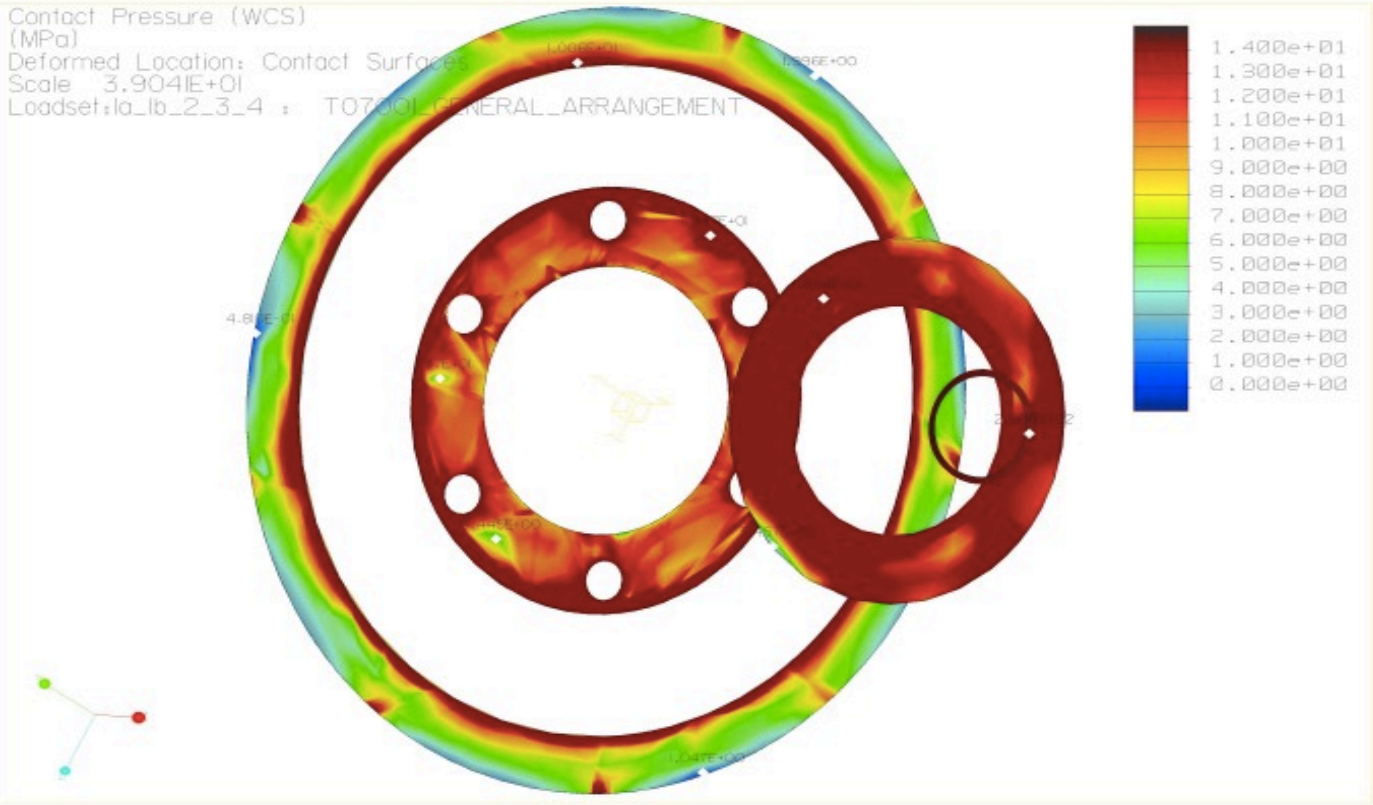

Analysis: Check Valve Assembly

- Withstand pressure loading due to preload per source: X114283-D002 Rev. 2

Operating Conditions for Stress Analysis		
Cases	Pb, psi	Pd, psi
1: DAT Proof	860	860
2a: DAT Cyclic #1	520	520

Material Yield Strength		35
Material Ultimate Strentgth		42
Loacation	Stress @ 860psi ksi	Limit Margin of Safety
Loc#1	28.15	0.24
Loc#2	22.85	0.53
Loc#3	16.45	1.13

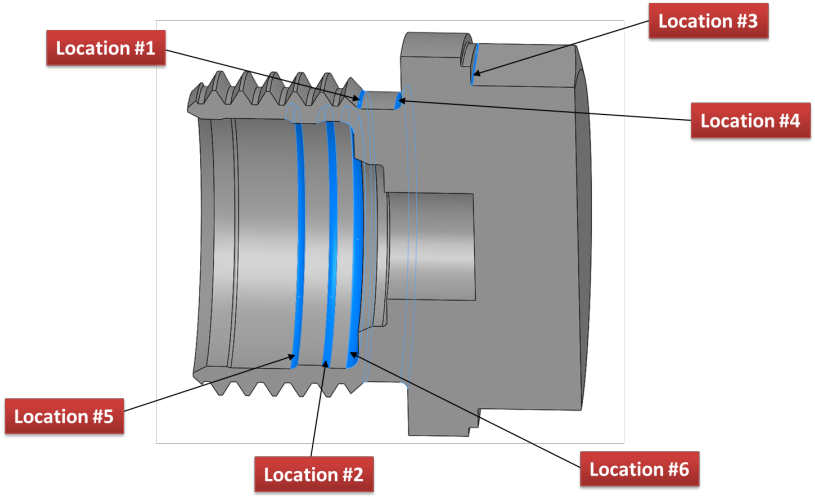

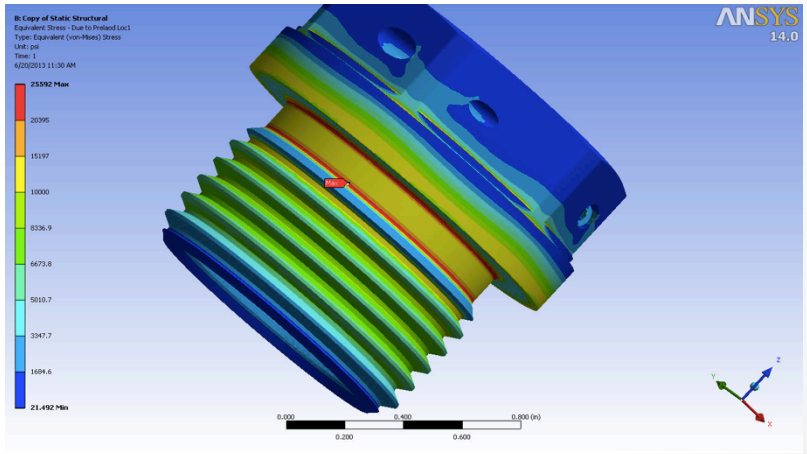

FE Model Results - VonMises Stress at Loc1 Due to Preload

Location 1-3 margin of safety acceptable per program requirements.

Presenting/Reporting Test Results

- **What was the requirement that drove this test?**
  - Satellite must withstand thermal variations in GEO orbit and launch of -65 C to 125 C.

- **What type of test did you complete?**
  What documentation or spec outlined test requirements?
  - Thermal cycling per MIL STD 883 method 2050 program class K

- **What are the key variables in the test?**
  - 50 cycles each with 10 minutes at -65 C and 20 minutes at 120 C

- **How does your analysis show this requirement has been validated**?
  - Visual inspection before and after test to ensure no cracks or delamination in electronic circuits per MIL STD 883 method 2010 program class K
  - Electronic burn out test before and after thermal cycling to ensure electrical performance meets program specs per class K

Fabrication Package

- Fabrication Package – Drawings (as Appendix within report). This section should focus solely on the details of the fabrication, assembly of, and manufacture of your design, as if this section, as a stand- alone document, would be provided to a manufacturer. It should NOT be introducing or describing functions, specifications, etc.
  - Provide assembly view drawing(s), exploded views, etc.
  - Provide fully dimensioned working drawings for the custom parts of your design
  - Provide a detailed Bill or Materials and/or parts list, including vendors, part numbers and price

Fabrication Package:

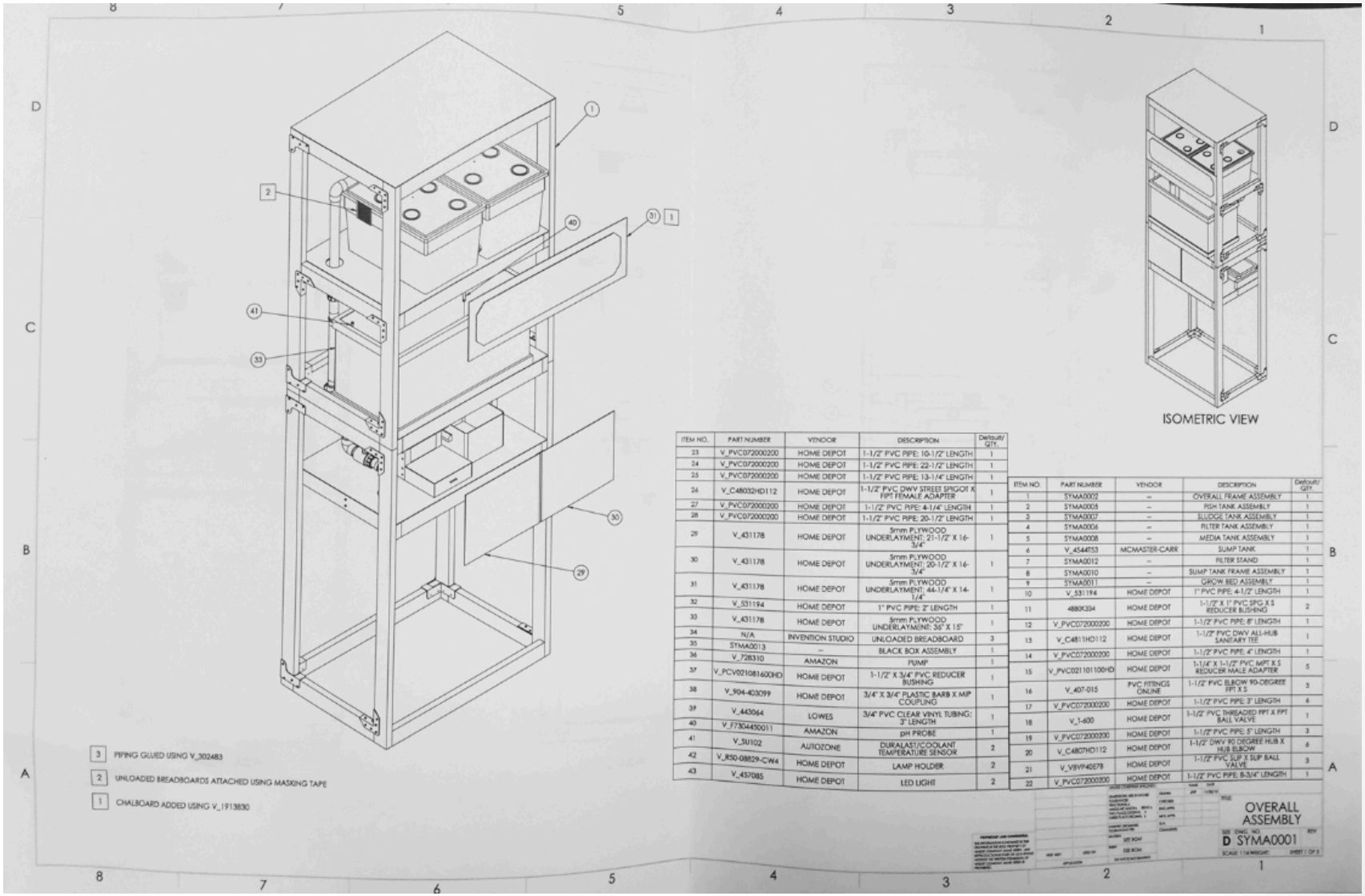

ITEM NO.	PART NUMBER	VENDOR	DESCRIPTION	Default/ QTY.
23	V_PVC072000200	HOME DEPOT	1-1/2" PVC PIPE: 10-1/2" LENGTH	1
24	V_PVC072000200	HOME DEPOT	1-1/2" PVC PIPE: 22-1/2" LENGTH	1
25	V_PVC072000200	HOME DEPOT	1-1/2" PVC PIPE: 13-1/4" LENGTH	1
26	V_C48032HD112	HOME DEPOT	1-1/2" PVC DWV STREET SPIGOT X FIPT FEMALE ADAPTER	1
27	V_PVC072000200	HOME DEPOT	1-1/2" PVC PIPE: 4-1/4" LENGTH	1
28	V_PVC072000200	HOME DEPOT	1-1/2" PVC PIPE: 20-1/2" LENGTH	1
29	V_431178	HOME DEPOT	5mm PLYWOOD UNDERLAYMENT: 21-1/2" X 16-3/4"	1
30	V_431178	HOME DEPOT	5mm PLYWOOD UNDERLAYMENT: 20-1/2" X 16-3/4"	1
31	V_431178	HOME DEPOT	5mm PLYWOOD UNDERLAYMENT: 44-1/4" X 14-1/4"	1
32	V_531194	HOME DEPOT	1" PVC PIPE: 2" LENGTH	1
33	V_431178	HOME DEPOT	5mm PLYWOOD UNDERLAYMENT: 36" X 15"	1
34	N/A	INVENTION STUDIO	UNLOADED BREADBOARD	3
35	SYMA0013	--	BLACK BOX ASSEMBLY	1
36	V_728310	AMAZON	PUMP	1
37	V_PCV021081600HD	HOME DEPOT	1-1/2" X 3/4" PVC REDUCER BUSHING	1
38	V_904-403099	HOME DEPOT	3/4" X 3/4" PLASTIC BARB X MIP COUPLING	1
39	V_443064	LOWES	3/4" PVC CLEAR VINYL TUBING: 3" LENGTH	1
40	V_F73044450011	AMAZON	pH PROBE	1
41	V_5U102	AUTOZONE	DURALAST/COOLANT TEMPERATURE SENSOR	2
42	V_R50-08829-CW4	HOME DEPOT	LAMP HOLDER	2
43	V_457085	HOME DEPOT	LED LIGHT	2

ITEM NO.	PART NUMBER	VENDOR	DESCRIPTION	Default/ QTY.
1	SYMA0002	--	OVERALL FRAME ASSEMBLY	1
2	SYMA0005	--	FISH TANK ASSEMBLY	1
3	SYMA0007	--	SLUDGE TANK ASSEMBLY	1
4	SYMA0006	--	FILTER TANK ASSEMBLY	1
5	SYMA0008	--	MEDIA TANK ASSEMBLY	1
6	V_4544753	MCMASTER-CARR	SUMP TANK	1
7	SYMA0012	--	FILTER STAND	1
8	SYMA0010	--	SUMP TANK FRAME ASSEMBLY	1
9	SYMA0011	--	GROW BED ASSEMBLY	1
10	V_531194	HOME DEPOT	1" PVC PIPE: 4-1/2" LENGTH	1
11	4880K334	HOME DEPOT	1-1/2" X 1" PVC SPG X S REDUCER BUSHING	2
12	V_PVC072000200	HOME DEPOT	1-1/2" PVC PIPE: 8" LENGTH	1
13	V_C48111HD112	HOME DEPOT	1-1/2" PVC DWV ALL-HUB SANITARY TEE	1
14	V_PVC072000200	HOME DEPOT	1-1/2" PVC PIPE: 4" LENGTH	1
15	V_PVC021101100HD	HOME DEPOT	1-1/4" X 1-1/2" PVC MPT X S REDUCER MALE ADAPTER	5
16	V_407-015	PVC FITINGS ONLINE	1-1/2" PVC ELBOW 90-DEGREE FPT X S	3
17	V_PVC072000200	HOME DEPOT	1-1/2" PVC PIPE: 3" LENGTH	6
18	V_1-600	HOME DEPOT	1-1/2" PVC THREADED FPT X FPT BALL VALVE	1
19	V_PVC072000200	HOME DEPOT	1-1/2" PVC PIPE: 5" LENGTH	3
20	V_C4807HD112	HOME DEPOT	1-1/2" DWV 90 DEGREE HUB X HUB ELBOW	6
21	V_V8VP40678	HOME DEPOT	1-1/2" PVC SLIP X SLIP BALL VALVE	3
22	V_PVC072000200	HOME DEPOT	1-1/2" PVC PIPE: 8-3/4" LENGTH	1

Fabrication Package

ISOMETRIC VIEW

ITEM NO.	PART NUMBER	VENDOR	DESCRIPTION	Default/ QTY.
23	V_PVC072000200	HOME DEPOT	1-1/2" PVC PIPE; 10-1/2" LENGTH	1
24	V_PVC072000200	HOME DEPOT	1-1/2" PVC PIPE; 22-1/2" LENGTH	1
25	V_PVC072000200	HOME DEPOT	1-1/2" PVC PIPE; 13-1/4" LENGTH	1
26	V_C48032HD112	HOME DEPOT	1-1/2" PVC DWV STREET SPIGOT X FIPT FEMALE ADAPTER	1
27	V_PVC072000200	HOME DEPOT	1-1/2" PVC PIPE; 4-1/4" LENGTH	1
28	V_PVC072000200	HOME DEPOT	1-1/2" PVC PIPE; 20-1/2" LENGTH	1
29	V_431178	HOME DEPOT	5mm PLYWOOD UNDERLAYMENT; 21-1/2" X 16-3/4"	1
30	V_431178	HOME DEPOT	5mm PLYWOOD UNDERLAYMENT; 20-1/2" X 16-3/4"	1
31	V_431178	HOME DEPOT	5mm PLYWOOD UNDERLAYMENT; 44-1/4" X 14-1/4"	1
32	V_531194	HOME DEPOT	1" PVC PIPE; 2" LENGTH	1
33	V_431178	HOME DEPOT	5mm PLYWOOD UNDERLAYMENT; 36" X 15"	1
34	N/A	INVENTION STUDIO	UNLOADED BREADBOARD	3
35	SYMA0013	–	BLACK BOX ASSEMBLY	1
36	V_728310	AMAZON	PUMP	1
37	V_PCV021081600HD	HOME DEPOT	1-1/2" X 3/4" PVC REDUCER BUSHING	1
38	V_904-403099	HOME DEPOT	3/4" X 3/4" PLASTIC BARB X MIP COUPLING	1
39	V_443064	LOWES	3/4" PVC CLEAR VINYL TUBING; 3" LENGTH	1
40	V_F7304450011	AMAZON	pH PROBE	1
41	V_SU102	AUTOZONE	DURALAST/COOLANT TEMPERATURE SENSOR	2
42	V_R50-08829-CW4	HOME DEPOT	LAMP HOLDER	2
43	V_457085	HOME DEPOT	LED LIGHT	2

ITEM NO.	PART NUMBER	VENDOR	DESCRIPTION	Default/ QTY.
1	SYMA0002	–	OVERALL FRAME ASSEMBLY	1
2	SYMA0005	–	FISH TANK ASSEMBLY	1
3	SYMA0007	–	SLUDGE TANK ASSEMBLY	1
4	SYMA0006	–	FILTER TANK ASSEMBLY	1
5	SYMA0008	–	MEDIA TANK ASSEMBLY	1
6	V_4544T53	MCMASTER-CARR	SUMP TANK	1
7	SYMA0012	–	FILTER STAND	1
8	SYMA0010	–	SUMP TANK FRAME ASSEMBLY	1
9	SYMA0011	–	GROW BED ASSEMBLY	1
10	V_531194	HOME DEPOT	1" PVC PIPE; 4-1/2" LENGTH	1
11	4880K334	HOME DEPOT	1-1/2" X 1" PVC SPG X S REDUCER BUSHING	2
12	V_PVC072000200	HOME DEPOT	1-1/2" PVC PIPE; 8" LENGTH	1
13	V_C4811HD112	HOME DEPOT	1-1/2" PVC DWV ALL-HUB SANITARY TEE	1
14	V_PVC072000200	HOME DEPOT	1-1/2" PVC PIPE; 4" LENGTH	1
15	V_PVC021101100HD	HOME DEPOT	1-1/4" X 1-1/2" PVC MPT X S REDUCER MALE ADAPTER	5
16	V_407-015	PVC FITTINGS ONLINE	1-1/2" PVC ELBOW 90-DEGREE FPT X S	3
17	V_PVC072000200	HOME DEPOT	1-1/2" PVC PIPE; 3" LENGTH	6
18	V_T-600	HOME DEPOT	1-1/2" PVC THREADED FPT X FPT BALL VALVE	1
19	V_PVC072000200	HOME DEPOT	1-1/2" PVC PIPE; 5" LENGTH	3
20	V_C4807HD112	HOME DEPOT	1-1/2" DWV 90 DEGREE HUB X HUB ELBOW	6
21	V_V8VP40E7B	HOME DEPOT	1-1/2" PVC SLIP X SLIP BALL VALVE	3
22	V_PVC072000200	HOME DEPOT	1-1/2" PVC PIPE; 8-3/4" LENGTH	1

B

A

OVERALL ASSEMBLY

D SYMA0001

SCALE: 1:16 WEIGHT: SHEET 1 OF 3

2 1

Fabrication Package

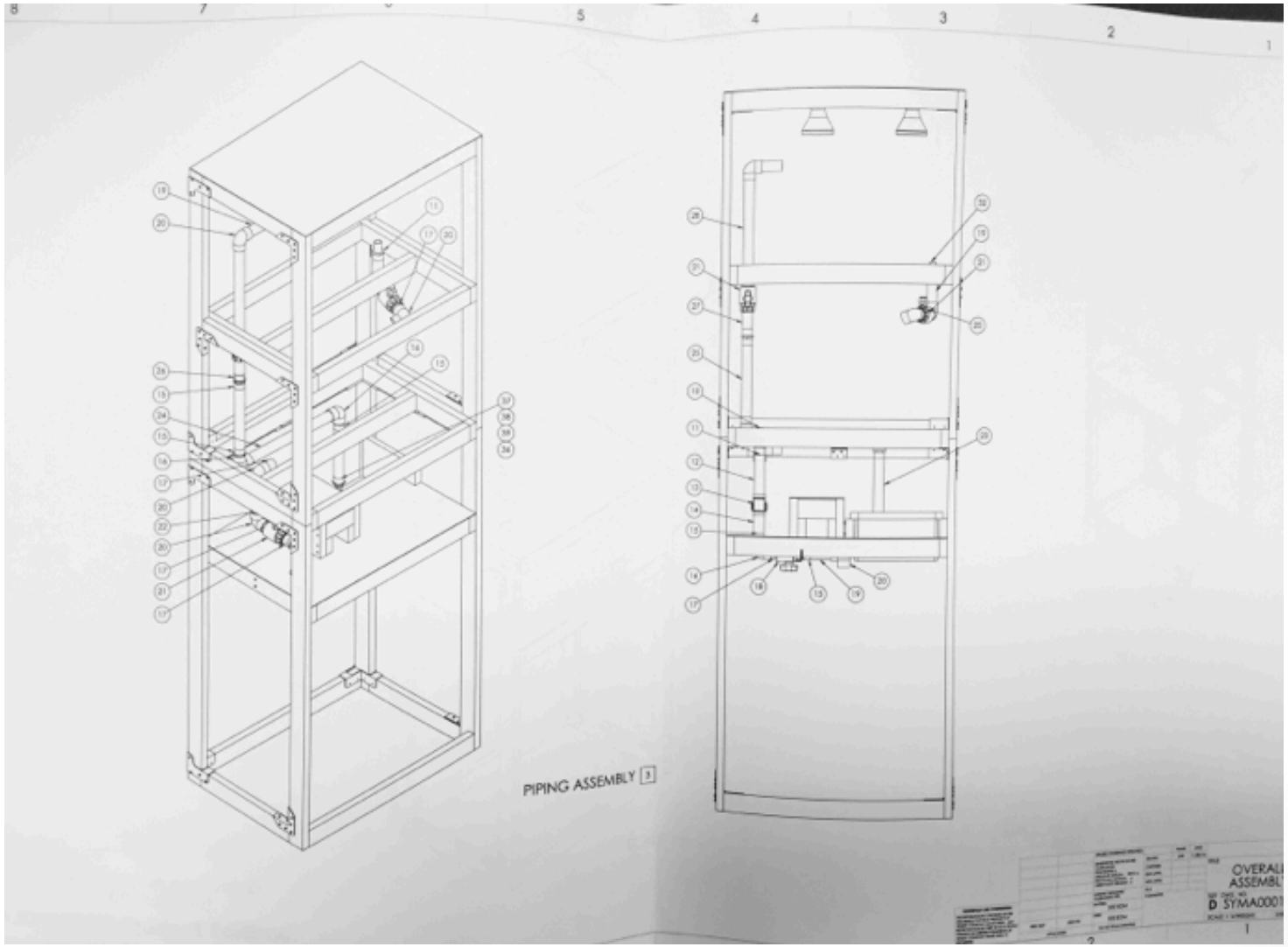

Fabrication Package

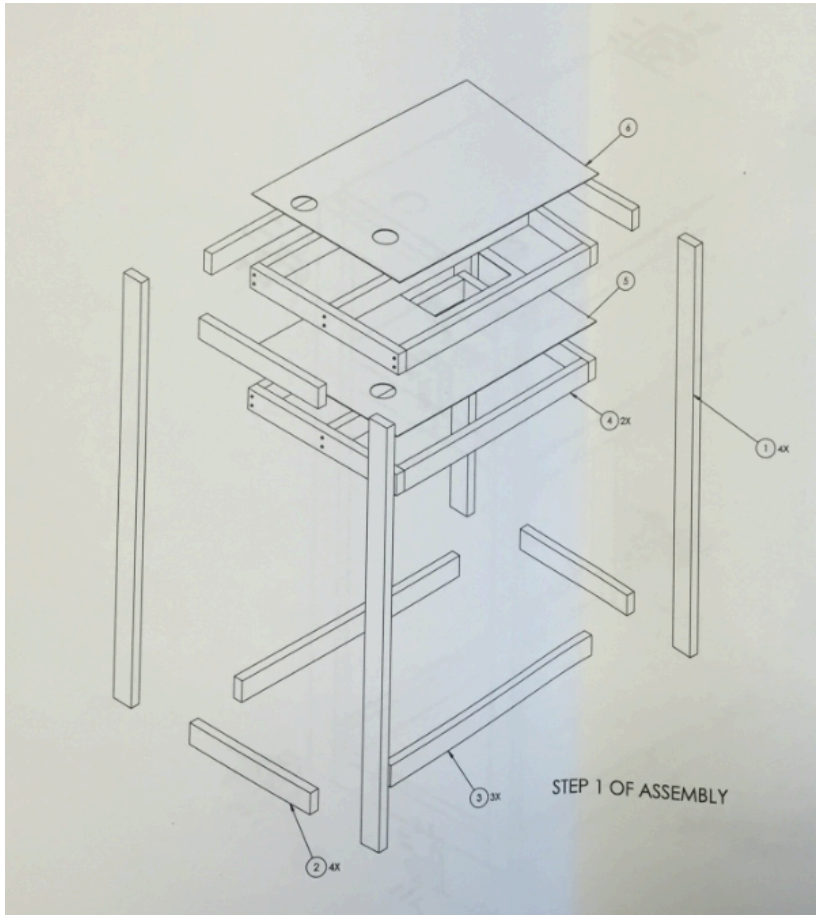

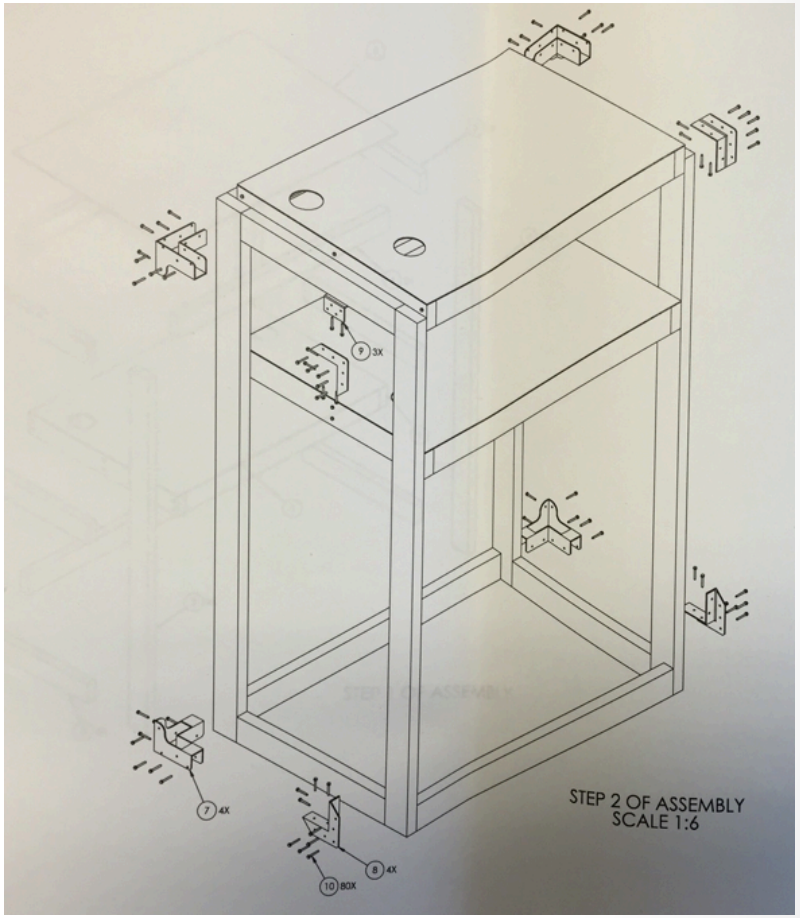

Fabrication Package

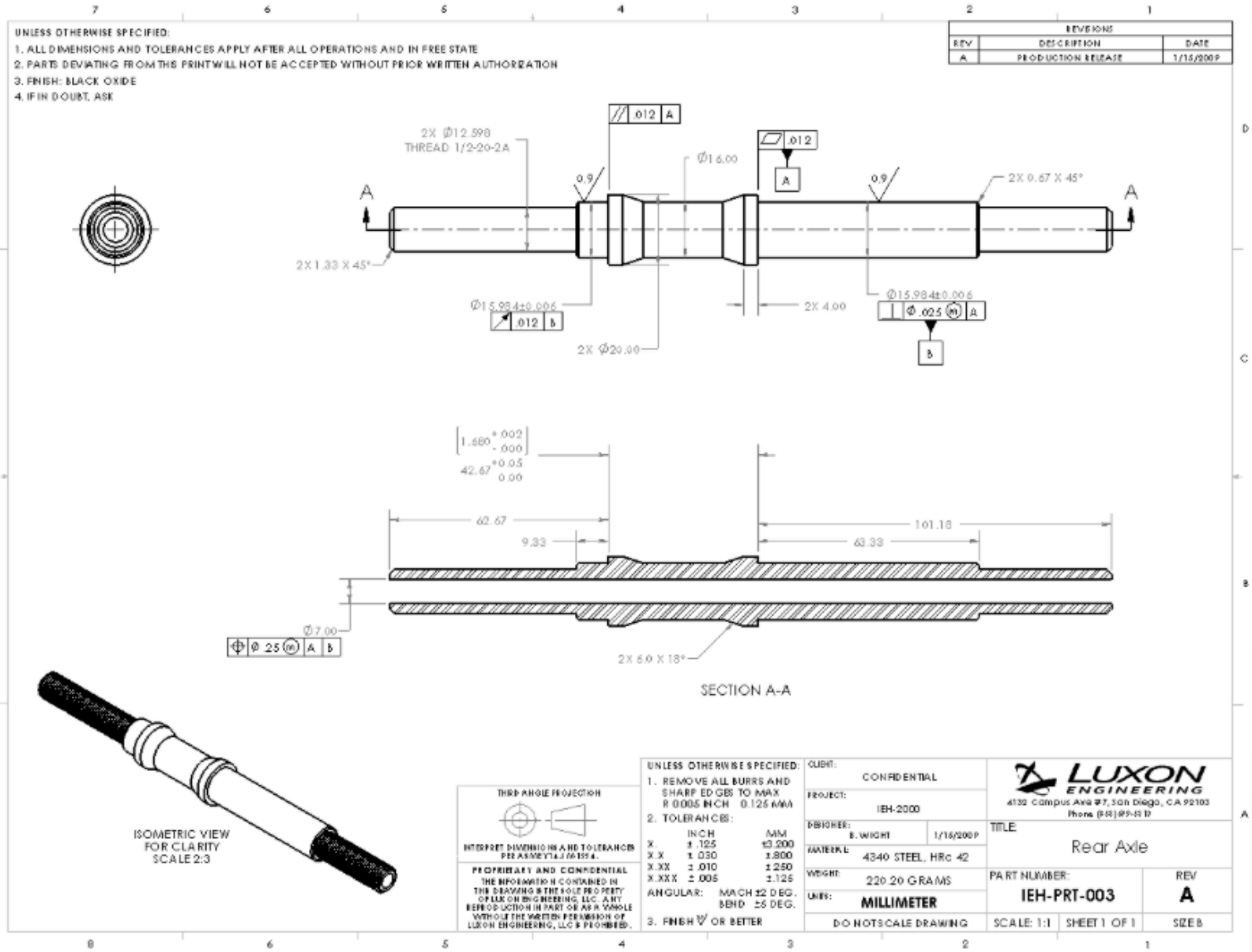

Fabrication Package

Assembly	Item	Part Name	Part Number	QTY	Vendor	Unit Price	Per Unit	Total Price	Prototype Material	Final Material
Nail Assembly	1	Nail Body	89055K53	1	McMaster-Carr	$ 10.70	0.5ft	$ 5.35	Ti-6Al-4V	Ti-6Al-4V
	2	Nail Shuttle	88855K1	1	McMaster-Carr	$ 3.32	0.5ft	$ 3.32	Stainless Steel 17-4PH	Stainless Steel 17-4 PH
	3	Nail Dynamic Element	SSM050X0300D	1	NDC	$ 1,176.00	1ft	$ 23.52	Nitinol	Nitinol
	4	Nail Sliding Element	89055K53	1	McMaster-Carr	$ 10.70	0.5ft	$ 1.07	Titanium Ti-6Al-4V	Ti-6Al-4V
Compression Assembly	5	Metal-Backed Sleeve Bearings (Shaft 6mm OD 8mm, Length 10mm)	6679K11	1	McMaster-Carr	$ 2.00	1oc	$ 2.00	Steel-Backed PTFE-Coated Bronze	Steel-Backed PTFE-Coated Bronze
	6	Compressor Piece	8974K28	1	McMaster-Carr	$ 2.30	.5ft	$ 0.29	6061 Aluminum	Ti-6Al-4V
	7	Thrust Bearing (Shaft 5/8" OD 1")	5906K515	1	McMaster-Carr	$ 1.01	1pc	$ 1.01	SAE 841 Solid Bronze	Plastic
	8	5/8" Thumb Nut	91725A150	1	McMaster-Carr	$ 8.94	1pc	$ 8.94	18-8 Stainless Steel	Stainless Steel
Targeting Arm Assembly	9	Manual Compression Rod	90575A818	1	McMaster-Carr	$ 10.52	0.5ft	$ 5.26	316 Stainless Steel	Stainless Steel 17-4PH
	10	M4 x 25mm Bolts	90278A375	2	McMaster-Carr	$ 2.39	1pc	$ 4.78	304 Stainless Steel	304 Stainless Steel
	11	Guide Rod	8974K18	1	McMaster-Carr	$ 11.28	0.5ft	$ 11.28	6061 Aluminum	Carbon-filled PEEK
	12	Targeting Arm	8503K444	1	McMaster-Carr	$ 61.46	1ft	$ 41.18	Delrin/PEEK	Carbon-filled PEEK
	13	Press Fit Metric Drill Bushing	8486A25	2	McMaster-Carr	$ 12.33	1pc	$ 24.66	Hardened Steel	Hardened 17-4PH
	-	1/8", 1 1/2" Length Dowel Pin	97395A454	1	McMaster-Carr	$ 1.19	1pc	$ 1.19	Hardened Steel	Hardened 17-4PH
Nail Holder Assembly	14	Nail Holder Sleeve	50415K24	1	McMaster-Carr	$ 13.90	0.5m	$ 2.78	316 Stainless Steel	Ti-6Al-4V
	15	Nail Holder	9811T13	1	McMaster-Carr	$ 56.19	0.5m	$ 11.24	Stainless Steel	Ti-6Al-4V
	16	M3 x 8mm Bolts	91292A112	2	McMaster-Carr	$ 0.04	1pc	$ 0.08	18-8 Stainless Steel	Stainless Steel
	17	Support Block	9008K14	1	McMaster-Carr	$ 4.40	0.5ft	$ 1.32	6061 Aluminum	Stainless Steel 17-4PH
	18	Plastic Plates	8662K11	2	McMaster-Carr	$ 2.20	1ft	$ 0.15	Delrin	Delrin
Cam Lever Assembly	19	Stretching Rod	89325K89	1	McMaster-Carr	$ 1.96	0.5ft	$ 0.75	Stainless Steel 316	316 Stainless Steel
	20	Bushing	88855K55	1	McMaster-Carr	$ 8.24	0.5ft	$ 8.24	Stainless Steel 17-4PH with 4140 Steel Pins	Stainless Steel 17-4PH with Hardened 17-4 Stainless Steel Pins
	21	Sleeve Bearing	6679K11	1	McMaster-Carr	$ 2.00	1pc	$ 2.00	Steel-Backed PTFE-Coated Bronze	UHMWPE
	22	Cam Lever	9008K14	1	McMaster-Carr	$ 4.40	0.5ft	$ 2.20	Alumiumum 6062, Radel PPSU	Alumiumum 6061, Radel PPSU
	23	M4 Nut	92497A250	1	McMaster-Carr	$ 14.07	100 pc	$ 0.14	Class 10 Steel	Stainless Steel 17-4PH
	24	Acorn Nut	94000A035	1	McMaster-Carr	$ 3.90	25 pc	$ 0.16	304 Stainless Steel	Stainless Steel 17-4PH
	-	1/8", 1/2" Length Dowel Pin	97395A441	2	McMaster-Carr	$ 0.69	1pc	$ 1.38	316 Stainless Steel	316 Stainless Steel
Miscellaneous	-	Collet Nut Wrench	6975A12	1	McMaster-Carr	$ 16.05	1pc	$ 16.05	Forged Steel	Steel

Top Mistakes New Grads Make

- Chief Engineers and Directors for Hamilton Sundstrand UTC
  - Turn in work for grading instead of completion
  - Presentation and report clarity
    - It doesn't matter how smart you are if you cannot explain it
  - Work hard
    - Stress Analysts
      - FBD is wrong
      - Understanding the difference between principal and effective stresses
      - Boundary conditions are wrong
      - Material properties are not from the correct source